DEANQUIP POWERTRANS HYDRAULICS & TOOLS PTY LTD

SELECTION & DIMENSION CHART

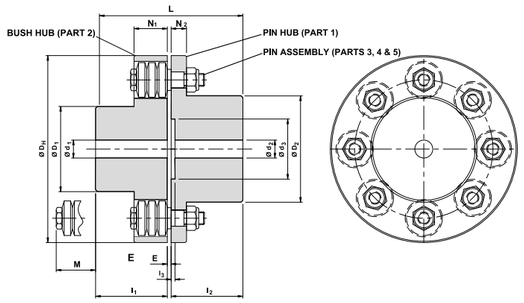

STANDARD PILOT BORE STYLE

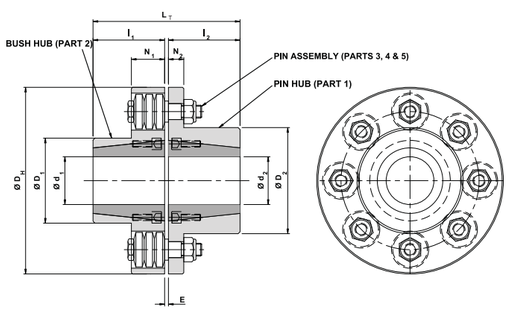

TAPERLOCK BUSH STYLE

Table D

Power Ratings	KX020	KX030	KX038	KX042	KX048	KX058	KX070	KX075	KX085	KX105	KX120	KX135	KX150	KX170	KX190	KX215	KX240	KX265	KX280	KX305	KX330	KX355	KX370
				KXT042	KXT048	KXT058	KXT070		KXT085	KXT105	KXT120	KXT135	KXT150										
Power kW per 100 rpm	0.55	1.16	1.85	2.82	4.89	7.55	10.72	25.68	35.50	53.24	88.73	120.6	158.5	246.1	341.9	443.7	747.2	993.8	1058.6	1297.4	1565.4	1975.9	2257.8
Power kW @ 720 rpm	3.99	8.37	13.34	20.28	35.21	54.36	77.20	185	256	383	639	868	1,141	1,772	2,462	3,195	5,380	-	-	-	-	-	-
Power kW @ 960 rpm	5.33	11.16	17.79	27.04	46.94	72.48	103	246	341	511	852	1,158	1,522	2,363	3,282	-	-	-	-	-	-	-	-
Power kW @ 1440 rpm	7.99	16.74	26.69	40.56	70.42	109	154	370	511	767	1,278	-	-	-	-	-	-	-	-	-	-	-	-
Power kW @ 2880 rpm	15.98	33.47	53.38	81.12	141	217	-	-	-	-	-	-	-	-	-	-	-	-	-	-	-	-	-
Speed Maximum (rpm)	6,400	4,500	4,300	3,900	3,300	2,900	2,600	2,200	2,000	1,730	1,570	1,360	1,250	1,070	960	860	775	690	630	590	550	500	460
Torque Nominal (Nm)	53	111	177	269	467	721	1,024	2,452	3,390	5,084	8,474	11,520	15,140	23,500	32,650	42,370	71,360	94,910	101,100	123,900	149,500	188,700	215,625
Torque Maximum (Nm)	106	222	354	538	934	1,442	2,048	4,904	6,780	10,168	16,948	23,040	30,280	47,000	65,300	84,740	142,720	189,820	202,200	247,800	299,000	327,400	431,250

Taperlock Bush Sizing				KXT042	KXT048	KXT058	KXT070		KXT085	KXT105	KXT120	KXT135	KXT150										
Pin Hub	-	-	-	1610	2012	2517	3020	-	3535	4040	4040	4545	5050	-	-	-	-	-	-	-	-	-	-
Bush Hub	-	-	-	1215	1615	2012	2525	-	3030	3535	4040	4545	5050	-	-	-	-	-	-	-	-	-	-

Dimensions (mm)	KX020	KX030	KX038	KX042	KX048	KX058	KX070	KX075	KX085	KX105	KX120	KX135	KX150	KX170	KX190	KX215	KX240	KX265	KX280	KX305	KX330	KX355	KX370
				KXT042	KXT048	KXT058	KXT070		KXT085	KXT105	KXT120	KXT135	KXT150										
d_1: Max Bore: Taperlock Bush Hub	-	-	-	32	42	58	60	-	75	90	100	110	125	-	-	-	-	-	-	-	-	-	-
d_2: Max Bore: Taperlock Pin Hub	-	-	-	42	58	65	70	-	90	100	100	110	125	-	-	-	-	-	-	-	-	-	-
d_1: Min/Max Bore:Pilot Bore Bush Hub	12/20	12/32	15/38	15/42	21/48	21/58	28/70	28/75	28/85	34/105	61/120	67/135	82/150	96/170	122/190	135/215	152/240	165/265	170/280	185/305	200/330	225/355	225/370
d_2: Min/Max Bore: Pilot Bore Pin Hub	12/28	12/38	15/42	15/48	21/55	21/65	28/75	28/80	28/105	34/120	61/130	67/135	82/150	96/170	122/190	135/215	152/240	165/265	170/280	185/305	200/330	225/355	225/370
d_3: Spigot Recess Diameter	33	42	58	58	76	76	109.5	109.5	134.9	160.3	185.7	211.1	211.1										
d_r: Diameter of Cone Rings	25	29	29	29	38.5	38.5	38.5	51	51	51	64.5	64.5	64.5	85.5	85.5	85.5	114	114	114	114	114	114	114
D_D: Drum Diameter (KXB only)	100	140/150	160	180	200	230	250	300	350/380	400	460	500											
D_H: Outside Diameter	89	127	132	146	171	193	216	254	279	330	370	419	457	533	597	660	737	826	927	991	1067	1156	1250
D_1: Hub Diameter, Bush Hub	33	58	64	78	82	98	117	130	148	180	206	230	256	292	330	368	407	457	508	533	572	610	720
D_2: Hub Diameter, Pin Hub	42	64	72	83	90	106	128	145	166	202	232	240	260	292	330	368	407	457	508	533	572	610	720
D_S: Spacer Diameter (KXS only)	-	58	64	78	82	98	117	130	148	180	-	-	-	-	-	-	-	-	-	-	-	-	-
E: Gap	3	3	3	3	3	3	3	3	3	3	6	6	6	6	6	6	6	6	6	6	6	6	6
l_1: Hub Length, KX Bush Hub	33	41	48	56	61	68	76	88	100	117	132	147	165	188	211	237	264	292	311	324	330	356	382
l_2: Hub Length, KX Pin Hub	33	41	48	56	61	68	76	88	100	117	132	147	165	188	211	237	264	292	311	324	330	356	382
l_1: Hub Length, KXT Bush Hub	-	-	-	38.1	38.1	31.8	63.5	-	76.2	88.9	105.6	114.3	127	-	-	-	-	-	-	-	-	-	-
l_2: Hub Length, KXT Pin Hub	-	-	-	28.4	35	47.5	54	-	93	105.6	105.6	119.3	132	-	-	-	-	-	-	-	-	-	-
l_3: Spigot Recess Length, Pin Hub	3	3	3	3	3	3	4	4	4	4	4	5	5										
L: Length,KX	69	85	99	115	125	139	155	179	203	237	270	300	336	382	428	480	534	590	628	654	666	718	770
L_R: Length, KXR		82	96	112	122	136	152	176	200	234	264	294	330										
L_S: Spacer Length Options (KXS only)	-	100/140	100/140	100/140/180	100/140/180	100/140/180	100/140/180	100/140/180	100/140/180	100/140/180	-	-	-	-	-	-	-	-	-	-	-	-	-
L_T: Length, KXT	-	-	-	69.5	76.1	82.3	120.5	-	172.2	197.5	217.2	239.6	265	-	-	-	-	-	-	-	-	-	-
M: Drop-out-centreDimension	23	26	20	12	26	19	11	46	34	22	45	30	12	43	20	30	43	15	75	62	56	30	4
L_D: Drum Length (KXB only)	65	70	70	90	80	100	100	120	150	160	190	190											
N_1: Flange Length, Bush Hub	23	26	26	26	33	33	33	56	56	56	76	76	76	92	92	92	122	122	122	122	122	122	122
N_2: Flange Length, Pin Hub	12	12	12	12	17	17	17	30	30	30	46	46	46	63	63	63	76	76	76	76	76	76	76
N_3: Flange Length, Spacer (KXS)	-	12	12	12	17	17	17	30	30	30	-	-	-	-	-	-	-	-	-	-	-	-	-

Pin Details	KX020	KX030	KX038	KX042	KX048	KX058	KX070	KX075	KX085	KX105	KX120	KX135	KX150	KX170	KX190	KX215	KX240	KX265	KX280	KX305	KX330	KX355	KX370
No. of Pins	6	4	6	8	6	8	10	8	10	12	10	12	14	10	12	14	10	12	14	16	18	20	24
Pin Size	M8	M10	M10	M10	M12	M12	M12	M20	M20	M20	M24	M24	M24	M36	M36	M36	M48	M48	M48	M48	M48	M48	M48
Recommended Tightening Torque (Nm)	25	50	50	50	87	87	87	115	115	115	200	200	200	710	710	710	1,725	1,725	1,725	1,725	1,725	1,725	1,725

Weights (kg)	KX020	KX030	KX038	KX042	KX048	KX058	KX070	KX075	KX085	KX105	KX120	KX135	KX150	KX170	KX190	KX215	KX240	KX265	KX280	KX305	KX330	KX355	KX370
Whole coupling with max bore (approx)	2	4	5	6	10	14	20	37	49	68	102	135	169	281	375	484	712	949	1,261	1,432	1,667	2,155	2,947

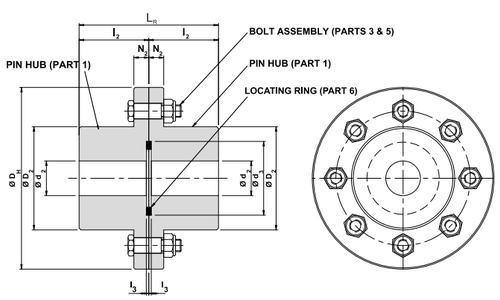

RIGID COUPLING STYLE

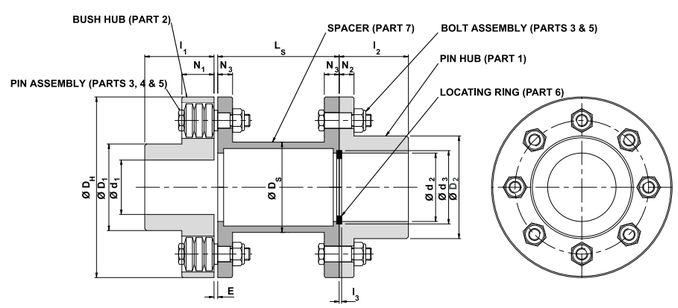

SPACER COUPLING

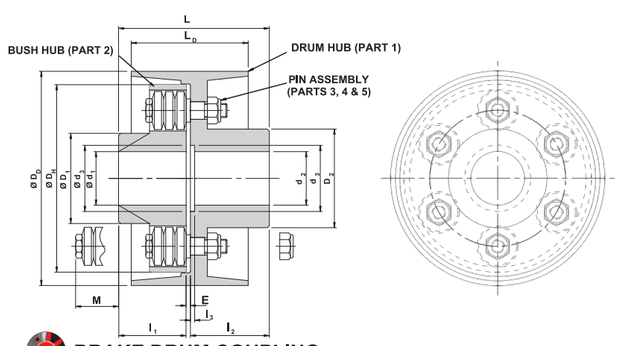

BRAKE DRUM COUPLING

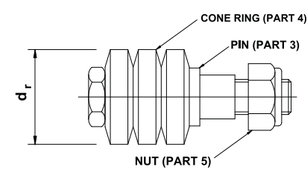

STANDARD PIN ASSEMBLY